XC740K / XC750K / XC760K / XC770K

Powerful motivator

The renowned brand engine equipped features strong power, ultra-low emission, and higher fuel efficiency. It provides the XCMG skid steer loader powerful enough to travel on rough roads. Whether in mud or on hard slopes, the combination of power and a long wheelbase gives greater stability and a smoother ride, so you're ready to tackle any task.

XCMG skid steer loaders can provide you with excellent power source in anywhere, anytime.

XC740K / XC750K / XC760K / XC770K

Steering clear of obstacles

The XCMG static hydraulic drive technology adopted features stable drive and high efficiency and reliability. It delivers four-wheel drive power across two independent, variable transmissions. This gives you counter-rotational steering and allows you to turn in a very tight, complete circle. It makes XCMG skid steer loaders manoeuvre obstacles with ease on tight spaces, passageways, construction sites, inside buildings.

High reliability and firmness

Reasonable and scientific design, rigorous technical requirements and strict assembly standards mean that XCMG machine has excellent quality. Our skid-steer loaders are no exception. The serialization design is applied for the frame based on the skid-steer tonnage to realize high structural reliability. All critical structural parts are optimized by finite element analysis to realize reasonable stress distribution. They are durable in rough conditions, so you can handle the toughest jobs.

Incomparable Multi-Functionalities

- The international interchangeable quick-change coupling enables the change of tens of attachments, including sweeper, planer, breaking hammer, and ditcher, rapidly and conveniently.

Sweeper

Overall width	mm	2210
Working width	mm	1738
Brush diameter	mm	660
Brush material		Wire and nylon combined
Storage capacity	m³	0.55
Motor displacement	ml/r	310
Traveling speed of machine	Km/h	<5
Flow range	Lpm	60-140
Weight	kg	535

Angle broom

Overall width	mm	2095
Working width	mm	1828
Brush diameter	mm	800
Brush material		Wire and nylon combined
Number of brushes		40±2
Weight	kg	441

Planer

Milling width	mm	460 (Standard)/600
Maximum milling depth	mm	150
Flow range	L/min	110-180
Number of milling cutters		68
System pressure	Mpa	20
Type of milled roads		Asphalt
Material of cutters		42CrMo

Manhole cover planer

Operating weight	Kg	900
Recommended flow	L/min	60—120
Working pressure	MPa	20
Motor displacement	Ml/r	1250
Maximum torque output	Nm	4000
Cutting radius	mm	600—750
Number of cutters	pcs	12
Output speed.	r	50—95
Transport sizes	mm	1400x1200x1500

Backhoe

Maximum digging depth	mm	2191
Maximum working height	mm	2750
Working radius	mm	2883
Bucket capacity	m³	0.04
Gross weight	kg	560
Number of control joysticks		4

Breaker

Operating weight	kg	564
Overall length	mm	1680
Working oil pressure	bar	110-140
Flow range	L/min	40-70
Brand of hammer core		Soosan
Impact frequency	Bpm	500-900
Shank diameter	mm	68
Impact energy	J	700
Pipeline size	mm	2800

XC740K / XC750K / XC760K / XC770K

Combination-Loaders / Telehandlers

Gross weight	kg	460
Bucket capacity	m^3	0.48
Overall width	mm	1889
Stretching spacing	mm	718
System pressure	Mpa	20
Clamping force	KN	8.2

Vibratory Roller

Wheel diameter	mm	530
Wheel width	mm	1220
Weight	kg	763
Vibrating force	KN	26
Vibrating speed	Vpm	2600

Trencher

Digging depth	mm	900
Digging width	mm	150
Digging speed	m/min	7
Weight	kg	425

Pallet Fork

Adjustable fork spacing (max)	mm	1524
Adjustable fork spacing (min)	mm	230
Gross weight	kg	207

Dozer blade

Overall length	mm	910
Overall width	mm	1524
Overall height	mm	627

Auger

Maximum drilling diameter	mm	400/600
Required flow of motor	L/min	60–80

Safe and Comfortable Operating Environment

The ROPS&FOPS cab and the seat belt, bumper, fire extinguisher, and safety hammer equipped guarantee the personal safety of the operator.

The cab features large space, adjustable seats, and comfortable operations.

The joysticks and the instrument panel are arranged in accordance with ergonomic principles so that the driver can always maintain the best comfort to make operations easier.

The standard double-accelerator control model means that you can use the pedal accelerator or work at preset constant power to save the operation labor.

Easy maintenance, less downtime

Maximizing uptime gives you the edge when it comes to productivity.

XCMG's skid-steer loader is applied with sprocket case of integral structure design and standard high-strength maintenance-free chain.

During the use of this product, no secondary tension is required to reduce the user's downtime due to periodical adjustment of chain.

XC740K / XC750K / XC760K / XC770K

The main parameters

		XC740K		XC750K	XC760K	XC770K	
Description							
Rated load	kg	750		900	1080	1250	
Tipping load	kg	1500		1800	2160	2500	
Operating weight	kg	3080		3400	3450	3700/3600	
Maximum breakout force	kN	≥18		≥20	22	22	
Maximum traction	kN	≥20		≥24	≥26	≥32	
Engine							
Manufacturer		XINCHAI		YANMAR	YANMAR	WEICHAI	YAMAR
Model	kW	C490BPG	4D27G31	4TNV98	4TNV98T	WP4.1	4TNV98T
Rated power	Hp/kw	54.4/40	49.3/36.8	67.3/50.2	82.2/61.3	100.4 / 74.9	82.2 / 61.3
Rated speed	rpm	2650	2500	2400	2500	2400	2500
Cooling mode		Liquid	Liquid	Liquid	Liquid	Liquid	
Discharge		Two stages	Three stages	Three stages	Three stages	Three stages	
Performance parameter							
Operation mode		Pilot hydraulic control & multifunction electronic control	Pilot hydraulic control & multifunction electronic control	Pilot hydraulic control & multifunction electronic control	Pilot hydraulic control & multifunction electronic control	Pilot hydraulic control & multifunction electronic control	
Tire standard		10-16.5		10-16.5	12-16.5	12-16.5	
Maximum speed	km/h	14.3		13.5	12.5	11/22	
Hydraulic system							
Hydraulic flow rate	L/min	62.5		75.9	95	91.2	
Optional large flow		--		119.6	142.5	158.4	
Hydraulic pressure	bar	200		210	210	210	

XC740K / XC750K / XC760K / XC770K

The main parameters

			XC740K	XC750K	XC760K	XC770K
	Description					
A	Maximum operating height	mm	3878	3878	4180	4180
B	Bucket hinge pin height	mm	3057	3057	3205	3205
C	Cabin top height	mm	1950	1950	1960	1960
D	Maximum horizontal height of bucket bottom	mm	2851	2851	2997	2997
E	Length without bucket	mm	2533	2533	2660	3050
F	Length with bucket	mm	3320	3320	3610	3750
G	Toppling angle	°	40	40	40	40
H	Maximum unloading height	mm	2375	2375	2450	2450
K	Ground-bucket angle	°	30	30	30	30
L	Rotating angle of bucket at highest point	°	83	83	83	83
J	Unloading distance	mm	575	575	570	570
M	Wheel base	mm	1027	1027	1188	1320
O	Departure angle	°	25	25	25	25
P	Ground clearance	mm	185	185	205	205
R	Front radius of turning circle (without bucket)	mm	1183	1183	1320	1370
S	Front radius of turning circle (with bucket)	mm	2066	2066	2230	2230
T	Rear radius of turning circle	mm	1564	1564	1715	1840
U	Length of tail	mm	1005	1052	1055	1105
V	Wheel track	mm	1380	1380	1500	1500
W	Tire edge width	mm	1640	1640	1807	1807
X	Bucket edge width	mm	1800	1800	2000	2000
	Bucket capacity (stacking height)	m^3	0.45	0.45	0.6	0.6
	Diesel tank capacity	L	80	80	95	108
	Capacity of hydraulic oil tank	L	60	60	70	80

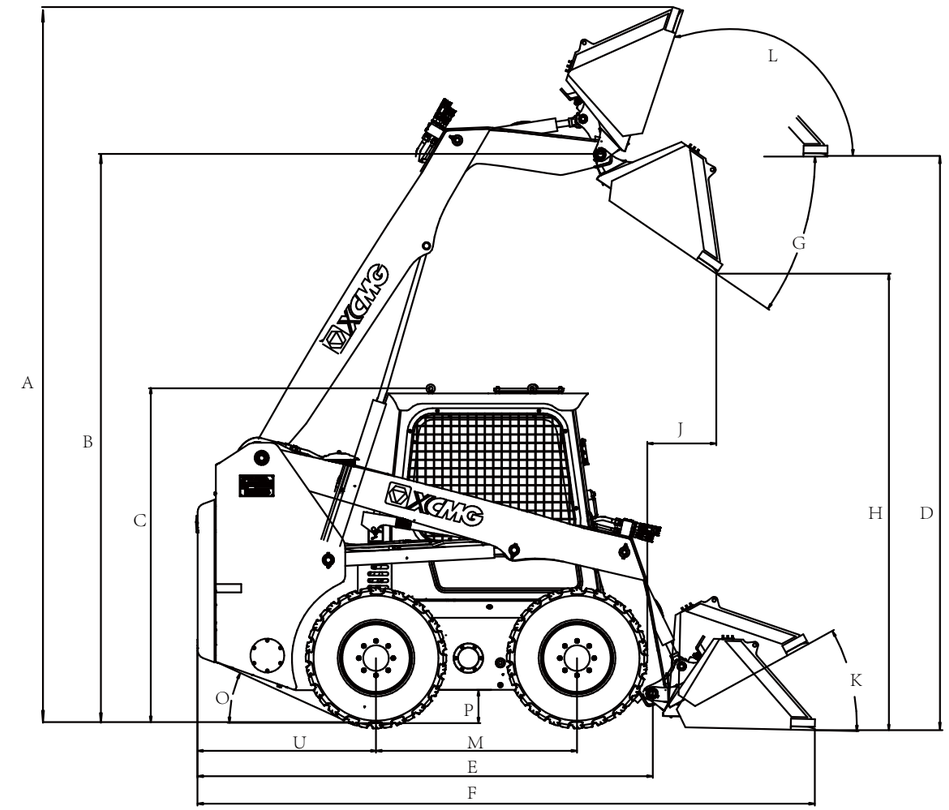

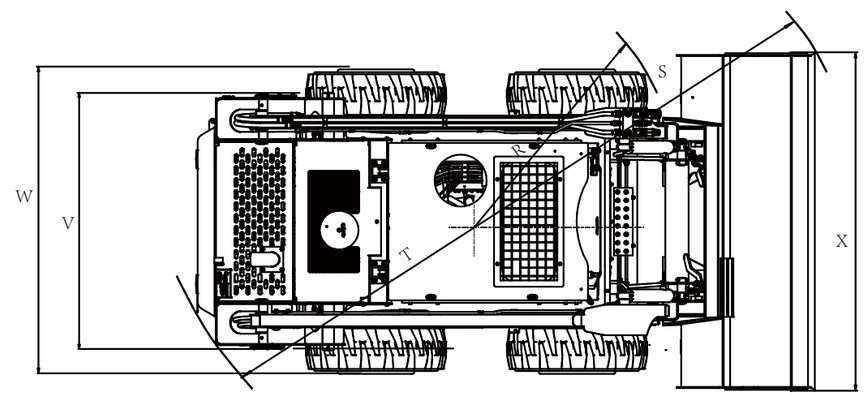

Structure and specification are subject to change without notice. In case there is any difference between the description of the machine and the substantial machine,the substantial machine should govern.