SANY

Quality changes the world!

STH1056A

Configurations

item	parameter
engine	Cummins QSF3.8 Tier 4(f)
rated power	97kw/2200rpm
torque	488Nm/1600rpm
transmission box	Dana-1120
front axle	Dana-212HY
rear axle	Dana-223
hydraulic system	Load sense piston pump
oil tank	140L
steering system	4-wheel circle, 4-wheel crab, 2-wheel front
tyre	400/75-28

Dimension

item	unit	parameter
height	m	2.55
length	m	6.28
wheel base	m	3.49
ground clearance	m	0.46
width	m	2.64
max lifting height	m	17.13
max extending distance	m	13.08
chassis adjusting angle	°	10
outer turning radius	m	4.3

Performance

item	unit	parameter
rated load	kg	4536
rated load (highest point)	kg	2722
rated load (extended point)	kg	1361
ascending speed	sec	14
descending speed	sec	11
boom extending speed	sec	16
boom extracting speed	sec	15
max travelling speed	km/h	32
max tracting capacity	kN	95
overall weight	kg	15100

SANY

Quality changes the world!

STH1056A

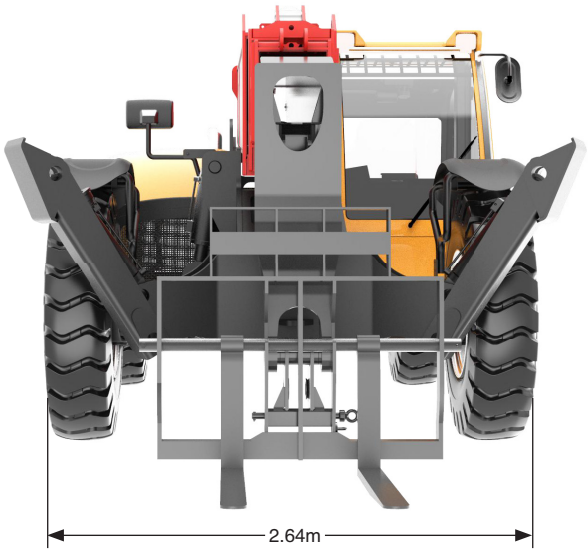

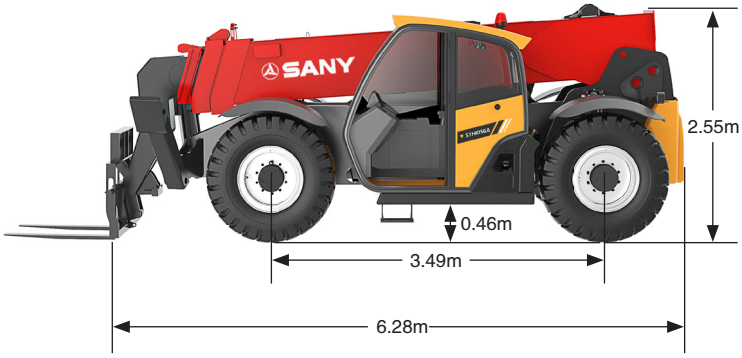

load diagram-legs extended

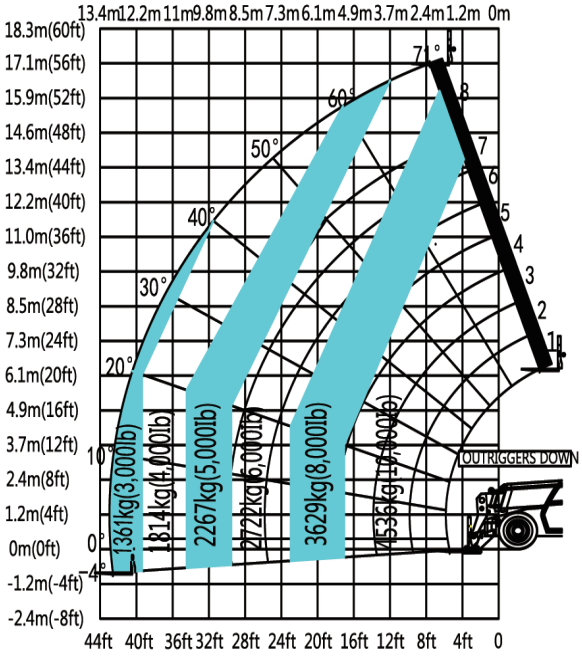

load diagram-legs extracted

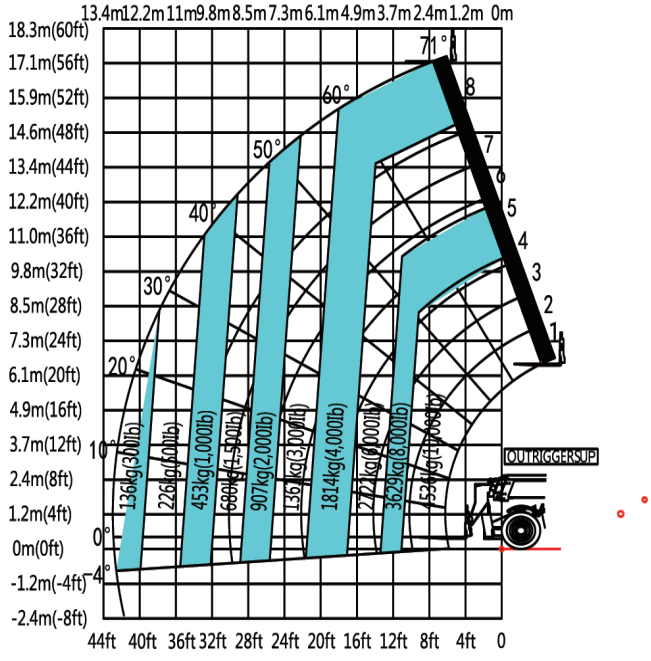

SANY MARINE HEAVY INDUSTRY CO., LTD.

SANY Industrial Park, Gaolan Port Economic and Development Zone,Zhuhai, Guangdong, China

Tel 0756-7266927 Service 4008 87 8318

Fax 0731-84031999-149 Consulting 4008 87 9318

Email chenx386@sany.com.cn

B03S2CHAS0808-CP

Any change in the technical parameters and configuration due to advancement in technology may occur without prior notice. The machine in the figures may include auxiliary equipment. This brochure is for reference only, and goods in kind shall prevail.

Copyright at Sany Marine Heavy Industry Co., Ltd. No part of this catalogue may be copied, recorded or used for any purpose without written approval from Sany Marine Heavy Industry Co., Ltd.